Application Note

Fiber Laser Pumped 2 ps OPO System for Nonlinear Microscopy: *pico*Emerald™ S

Abstract: With the new *pico*Emerald™ S we present a fully integrated light source for nonlinear microscopy. The OPO based system is pumped by a reliable industrial grade fiber laser and delivers stokes pulses at 1032 nm and widely tunable Signal (CRS pump) and Idler pulses with 2 ps duration and 10 cm^{-1} bandwidth as well as featuring a built-in modulator for the stokes pulse train. Combined with an optimized lock-in amplifier, designed by A·P·E, video rate SRS measurements in the molecular fingerprint region are possible. Compared to previous systems with longer pulse durations, the Signal and Signal-to-Noise ratio is improved by a factor of 10 for CARS and 2.5 for SRS.

Introduction

In recent years Coherent Raman Scattering (CRS) microscopy has matured into a reliable imaging method, enabling cutting edge chemistry and bioscience research. Not only have microscope manufactures perfected their instruments, but also access to advanced laser light sources allowed for this rapid development. However, for productive research a new generation of light sources is required as well. They have to be reliable and fully automated and need to deliver optimized laser pulses at any desired wavelength with the push of a button. For imaging methods, which rely on vibrational states of organic molecules, e.g. CARS or SRS, picosecond pulse width has been proven to be optimal [1]. Furthermore, two synchronized high peak power pulses are necessary to address the vibrational state via a nonlinear optical effect. Such a pair of synchronized pulses, called Stokes and Pump pulses, are most reliably generated in an optical parametric oscillator (OPO). Here we report on a new system with outstanding performance fulfilling even the most demanding requirements for advanced SRS microscopy. The system delivers wavelength tunable stokes pulses and handles the pulse synchronization and optional pulse modulation of the pump pulse train for highly sensitive lock-in detection of the nonlinear optical response.

Description of the fully integrated OPO system

For SRS microscopy the molecular fingerprint region is of particularly high interest. Access to this region with an OPO based setup, pumped at 1 µm, has become standard. Over many years fiber lasers have proven their reliability in medical applications and material processing. In this system we use such an industrial

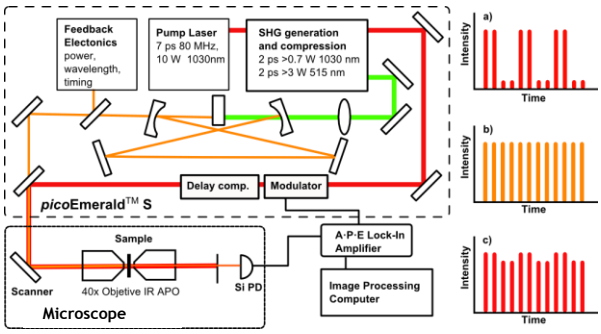

Figure 1: Schematic setup of the *pico*Emerald™ S and the used setup for the comparison measurements. The pump laser, SHG, OPO, and electronics are all in one housing (dotted line) and provide co-propagating Pump and Signal beams with synchronized pulses.

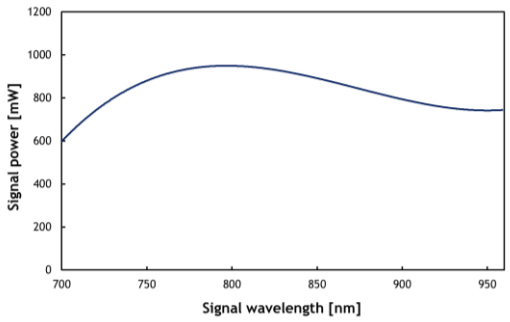

Figure 2: OPO output power for the Signal tuning range. The results of 240 independent fully automated tuning and optimization events are displayed as black dots and the mean output power plotted as a solid red line.

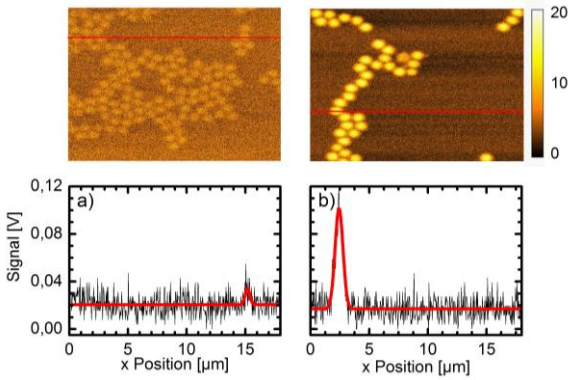

Figure 3: Two images of polystyrene beads (1µm) in water recorded with a standard light source and 7 ps pulse duration (left) and one recorded with the new *pico*Emerald™ S. The line data taken from the above images in the bottom graphs allows quantifying the improved Signal-to-Noise ratio.

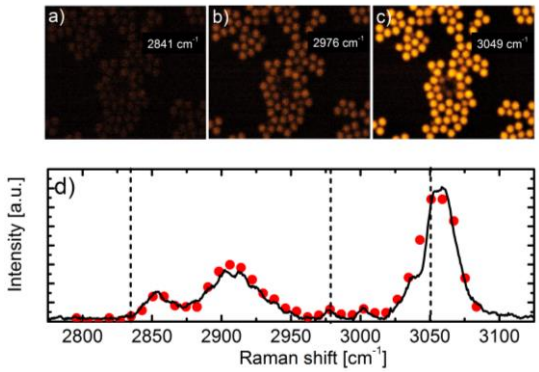

Figure 4. Demonstration of a multicolor SRS measurement of polystyrene beads. The system was tuned from 2750 cm^{-1} to 3150 cm^{-1} with the fast sweep function. The recorded data (red dots) is in perfect agreement with the theoretical data (solid line). Images a), b) and c) show three different images of the scan.

grade state-of-the-art mode-locked Ytterbium fiber laser, generating 5.2 ps long pulses with a bandwidth of 10 cm^{-1}, i.e. only 1 nm, centered at 1032 nm with an average power of 10 W at a repetition rate of 80 MHz. Since most of the vibrational bands in the spectral region of interest tend to have only a few wave numbers of bandwidth, picosecond pulses allow for very effective pumping. A schematic of the setup is provided in Figure 1: First the pulses are compressed to the Fourier limit and then frequency doubled. The pulse duration for both the extracted undepleted 0.7 W infrared SRS pump, and the 3.5 W green SHG beam is measured to be about 2 ps. The green SHG light is then used to pump a synchronously pumped OPO in a ring cavity layout. The OPO Signal output at wavelengths between 700 nm and 960 nm used as Pump pulses is shown in Fig. 2. Given the Stokes pulse train at 1032 nm and an OPO Signal tunable from 700 nm to 960 nm used as SRS pump the new system allows for imaging in the spectral region from 726 cm^{-1} to 4595 cm^{-1}. An average output power between 600 mW and 1000 mW is observed. For the OPO Signal a bandwidth of consistently 10 cm^{-1} was measured throughout the entire tuning range. The pulse durations are close to the transform limit, which is confirmed by autocorrelation measurements. Although the complete system, consisting of the pump laser, the compression unit, the SHG, and the OPO is highly complex, an automated tuning and optimization of the output power is implemented with feedback electronics. OPO and 1032nm pulses are perfectly overlapped in space. They are also temporally overlapped via an internal delay line. The delay line is
variable and computer controlled to allow few tens of picoseconds delay variation to accommodate possible dispersion which the beams of different wavelengths may be exposed to when propagating through optical elements, e.g. in a microscope. Additionally, the complete system as depicted in Fig. 1. (the dashed line represents the enclosure), is thermally stabilized and in critical areas sealed in a cleanroom environment, in order to further improve the performance and reliability. After reaching a specific wavelength, the OPO is kept stable through a closed cavity feedback loop by continuously monitoring power and wavelength. The system provides an accurate value of the output wavelength. For imaging applications a very high power reproducibility and stability is required. For maximum stability performance the Stokes and Pump output power are actively stabilized. They can be fixed at any power value within the specifications. This way, extraordinary long term stability is achieved.

Improved Imaging Performance with 2 ps Pulses compared to systems with longer pulse widths

Previous generations of picosecond light sources typically generate pulses with durations of 5 ps or more due to limitations of the available Nd:YVO pump laser technology. A·P·E's new system overcomes these limitations and can be operated at an optimum pulse duration of 2 ps with an ideal 10 cm^{-1} bandwidth. To

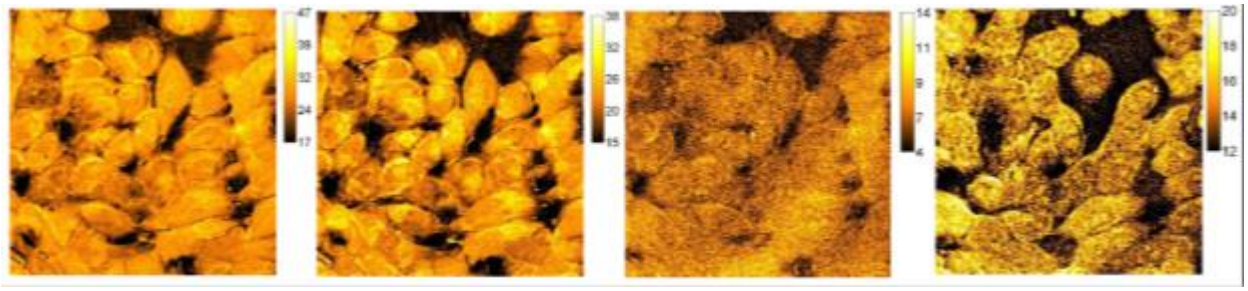

Figure 5. finger print images of living HeLa cells with a) 1645 cm^{-1}, b) 1455 cm^{-1}, c) 1005cm^{-1}, and d) 750 cm^{-1} (from left to right);

demonstrate the improved imaging performance, we compare the new light source with a reference OPO system with the same specifications, except for the pulse width, which is 7 ps for the reference system compared to 2 ps for the new system. Both systems are tuned to address a Raman shift at 3055 cm^{-1} and deliver the same power of P_{Pump}=6 mW and P_{Stokes}=10 mW to the sample, resulting in a similar signal power level of P_{Pump}= 4.4 mW in the detector. In both measurements the SRS signal is detected with a highly optimized commercially available lock-in-amplifier designed by A·P·E. 2D scans with 200 lines/s, 512 pixels per line and a pixel dwell time of 9.8 µs are performed. Polystyrene beads (ø = 1 µm) in water are used as an sample. Comparing the two images in Figure 3 (top), one finds a much better contrast for the shorter pulses on the right side. A closer comparison between the two data sets, taken at the red lines, reveals an improvement of the Signal-to-Noise ratio by a factor of 6. The improvement can be explained by a much more efficient pumping of the nonlinear optical effect, because of the higher peak power of the 2 ps pulses provided by the new system. Further systematic measurements on Dodecane-water emulsion reveal a factor of 10 for CARS and 2.5 for SRS in Signal-to-Noise and signal increase.

Multispectral SRS Imaging by fast sweeping the wavelength

One great advantage of SRS imaging is that the method allows for qualitative analysis of the spectral response from the sample. Other nonlinear imaging methods, such as e.g. CARS, may convolute the spectra, with a deconvolution having proven to be difficult. SRS spectra directly compare to the intrinsic Raman spectra of the samples. Tuning of the OPO Signal wavelength allows for recording the Raman spectra of the sample in the fingerprint region and to implement multispectral SRS [3]. Fast sweeping is implemented for both the image optimization and the sample characterization.

While tuning to a randomly chosen wavelength and subsequent optimization may take the feedback electronics between 30 and 240 seconds, sweeping through a consecutive number of wavelengths with continuous optimization is much faster. A measurement at a new wavelength can be typically performed in 5 s. Figure 4 shows the results of a fast wavelength scan (bottom) from 2750 cm^{-1} to 3150 cm^{-1}. Each red dot represents the SRS Signal measured at a pixel of the 2D images recorded. Perfect agreement to the theoretical data (solid black line) is found. Subfigures a) to c) of Figure 4 show the complete images taken at different Raman wavelengths (positions marked with dashed lines). An improved contrast is observed if the light source is tuned to a maximum of the Raman spectrum. All images are color coded on the same scale. Comparing b) and c) one finds that even smaller maxima, as the one located at 2976 cm^{-1}, yield a good Signal-to-Noise ratio and can be used for imaging, because of the optimized pulse duration of the new system.

Video-rate imaging and imaging in the fingerprint region of living HeLa cells

The presented system can be equipped with a dedicated lock-in-amplifier designed and build by A·P·E. For this combination integration times of well below 100 ns are demonstrated, while maintaining an excellent Signal-to-Noise ratio. Video rate imaging of polystyrene beads and of HeLa cells with a pixel dwell time of 120 ns were demonstrated.

In Figure 5 we present fast scanning images of live HeLa cells in the fingerprint region. The images are

taken with 50 mW Pump and 200 mW Stokes power on the sample, 10 Frames of 1024 by 1024 pixels with a dwell time of 1 µs, are averaged. For each image a different stokes wavelength is used resulting in CRS signal from vibrations at a) 1645 cm^{-1}, b) 1455 cm^{-1}, c) 1005 cm^{-1}, and d) 750 cm^{-1}, i.e., on different wavelength covering the entire fingerprint region. At all wavelengths XYZ scans of the HeLa cells are demonstrated.

Conclusion

We present a state-of-the-art light source for nonlinear microscopy. In particular, the system meets all requirements for SRS microscopy and is pumped by a reliable 1 µm fiber laser. The system delivers synchronized pulses of more than 700 mW of power at a wavelength of 1032 nm, more than 500 mW in the OPO Signal range from 700 nm to 960 nm, and more than 400 mW in the OPO Idler range from 1150 nm to 1350 nm. The pump can be modulated with a built-in modulator. The delay compensation and pulse synchronization are built into the sealed hands-free system. Via CRS the system allows for imaging in the spectral region from 720 cm^{-1} to 4500 cm^{-1}, including the important fingerprint region. We have compared the performance of this new light source with only 2 ps pulse duration to a reference system with longer pulses. A greatly improved Signal-to-Noise and Signal level has been demonstrated. Furthermore, a sweep in the fingerprint region has been performed, proving the multi spectral imaging capability of the system. Together with an A·P·E lock-in-amplifier an integration time of less than 100 ns is possible and the low noise even allows for video-rate imaging. The presented system is fully integrated, sealed and allows for completely hands-free operation.

© A·P·E Angewandte Physik & Elektronik GmbH
All microscopic images in courtesy of A. Volkmer (University of Stuttgart)

References:

[1] L. Wei, F.Hu, Y. Shen, Z. Chen, Y. Yu, C. Lin, M. Wang, and W. Min, " Live-cell imaging of alkyne-tagged small biomolecules by stimulated Raman scattering," Nature Methods 11, 410-412 (2014).

[2] V. Raghunathan, Y. Han, O. Korth, N. Ge, and E. Potma, "Rapid vibrational imaging with sum frequency generation microscopy," Opt. Lett. 36, 3891-3893 (2011).

[3] F. Lu, M.Ji, Dan Fu, X. Ni, C. W. Freudiger, G. Holtom, and X. S. Xie, " Multicolor stimulated Raman scattering (SRS) microscopy," Mol. Phys. 110, 1927-1932-3893 (2012).

[4] M.B. Roeffaers, X. Zhang, C.W. Freudiger, B.G. Saar, M. van Ruijven, G. van Dalen, C. Xiao, and X.S. Xie, "Label-free imaging of biomolecules in food products using stimulated Raman microscopy," J. of Biomedical Optics 16, 021118 (2011)

[5] B.G. Saar, C. W. Freudiger, J. Reichman, M.C. Stanley, G.R. Holtom, X.S. Xie, "Video-Rate Molecular Imaging in Vivo with Stimulated Raman Scattering," Science, 330, 1368-1370 (2010)

[6] C.W. Freudiger, W. Min, B.G. Saar, S. Lu, G. Holtom, C. He, J.C. Tsai, J.X. Kang, X.S. Xie, "label free biomedical imaging with high sensitivity by stimulated Raman scattering microscopy", Science 322, 1857 (2008)

[7] F. Ganikhanov, S.Carrasco, X.S. Xie, M.Katz, W.Seitz, and D.Kopf, " Broadly tunable dual-wavelength light source for coherent anti-Stokes Raman scattering microscopy," Optics Letters, Vol. 31, Issue 9, pp. 1292-1294 (2006)

[8] P. Nandakumar, A. Kovalev, and A. Volkmer, "Vibrational imaging based on stimulated Raman scattering microscopy," New J. Phys. 16, 033026 (2009)

[9] A. Zumbusch, G. R. Holtom, and X. S. Xie, " Three-Dimensional Vibrational Imaging by Coherent Anti-Stokes Raman Scattering," Phys. Rev. Lett. 82, 4142 (1999)